LIQUID REFRIGERANT RECEIVER (HORIZONTAL)

IMAGE, DRAWING & MODEL AVAILABLE

DIMENSIONAL DATA

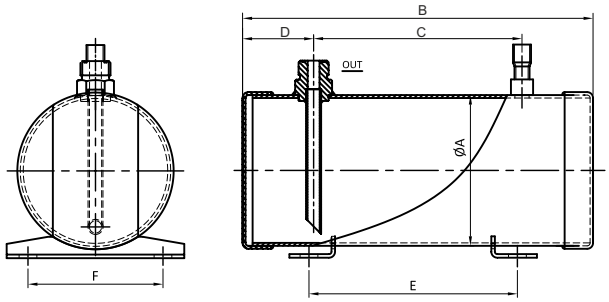

SR.NO	MODEL NO.	INTERNAL VOLUME (CAPACITY) LITERS	PUMP DOWN CAPACITY (Kg)	SUGGESTED CONNECTION SIZES		DIMENSIONS												MOUNTING OPTIONS	REFER DRAWING NO.	1/4" NPT CONNECTION
						ØA		B		C		D		E		F				
				INLET	OUTLET	mm	inch	mm	inch	mm	inch	mm	inch	mm	inch	mm	inch			
1	LRRH -5296-3S	3	3	3/8" ODF	1"-14 UNS	127	5	296	11.66	176	6.93	60	2.36	176	6.93	114	4.48	MOUNTING BRACKET WITH Ø15mm HOLES X 4nos.	H1	CR
2	LRRH -5376-3S	4	4					376	14.81	256	10.08			256	10.08					
3	LRRH - 5456-3S	5	5					456	17.96	336	13.23			336	13.23					
4	LRRH - 5536-3S	6	6					536	21.11	416	16.37			416	16.37					
5	LRRH - 5566-4S	6	7	1/2" ODF				566	21.88	436	17.16			436	17.16					
6	LRRH - 6465-4S	7	8			152.4	6	465	18.31	345	13.58			345	13.58	140	5.53			
7	LRRH - 6526-4S	8	9					526	21.71	406	15.98			406	15.98					
8	LRRH - 6587-4S	9	10					587	23.12	467	18.38			467	18.38					
9	LRRH - 6648-5S	10	11	5/8" ODF	1-1/4"-12 UNF			648	25.52	528	20.78			528	20.78					
10	LRRH - 6709-5S	11	12					709	27.92	589	23.18			589	23.18					
11	LRRH - 6770-5S	12	13					770	30.32	650	25.59			650	25.59					
12	LRRH - 6800-5S	13	13					800	31.49	680	26.77			680	26.77					

RECEIVER WITH NPT CONNECTION ARE ALSO PROVIDED AS PER CUSTOMER REQUIREMENT

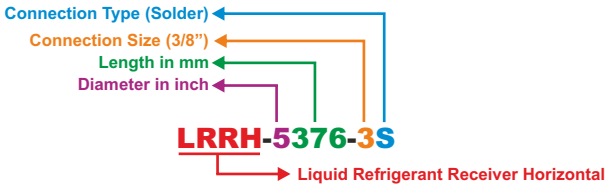

LIQUID REFRIGERANT RECEIVER (VERTICAL)

IMAGES, DRAWINGS & MODELS AVAILABLE

DIMENSIONAL DATA

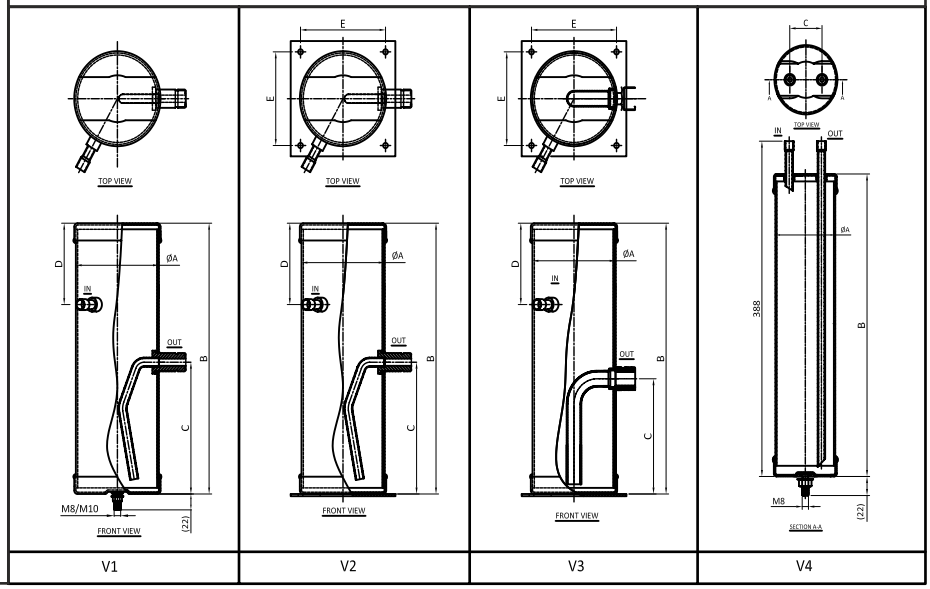

V1 | V2 | V3 | V4

SERIES 1 (SIDE INLET & SIDE OUTLET)

SR NO	MODLE NO.	INTERNAL VOLUME (CAPACITY) LITERS	PUMP DOWN CAPACITY (KG)	CONNECTION SIZES		DIMENSIONS										MOUNTING OPTION	REFER DRAWING NO	LIQUID INDICATOR
				INLET	OUTLET	ØA		B		C		D		E				
						mm	inch	mm	inch	mm	inch	mm	inch	mm	inch			
1	LRRV-3482-3S	2	2	3/8" ODF (STEEL)	1"-14 UNS	76.2	3	482	18.97	175	6.88	80	3.14	NA	NA	M8 X 1.25 BOLT & NUT	V1	NA
2	LRRV-5296-3S	3	3			127	5	296	11.65	183	7.20	60	2.36			M10 X 1.5 BOLT & NUT		CR
3	LRRV-5376-3S	4	4					376	14.81			74	2.91					
4	LRRV-5456-4S	5	5					456	17.96			86	3.38	130	5.12	MOUNTING FLANGE	V2	
5	LRRV-5536-4S	6	6	1/2 " ODF (STEEL)				536	21.11			106	4.17					
6	LRRV-5566-4S	6	6					566	22.28			111	4.37					
7	LRRV-6465-4S	7	7			152.4	6	465	18.31	160	6.29	93	3.66					
8	LRRV-6526-4S	8	8					526	20.71			106	4.17					
9	LRRV-6587-4S	9	9					587	23.12			117	4.60					
10	LRRV-6648-5S	10	10	5/8 " ODF (STEEL)				648	25.52			128	5.03					
11	LRRV-6709-5S	11	11					709	27.92			139	5.47					
12	LRRV-6770-5S	12	12		1-1/4"-12 UNF			770	30.32			150	5.90				V3	
13	LRRV-6800-5S	13	13					800	31.49			160	6.29					
SERIES 2 (TOP DISH INLET & OUTLET)																		
LRRV-3350-3S	1	LRRV-3350-3S	1	1	3/8" ODF (COPPER)	3/8" ODF (COPPER)	76.2	3	350	13.78	41	1.62	NA	NA	NA	NA	M8 X 1.25 BOLT & NUT	V4	NA

Connection Type (Solder)
Connection Size (3/8")
Length in mm
Diameter in inch

LRRV-5376-3S

Liquid Refrigerant Receiver Vertical

LIQUID REFRIGERANT RECEIVER (DEEP DRAW TYPE)

IMAGE, DRAWINGS & MODELS AVAILABLE

DIMENSIONAL DATA

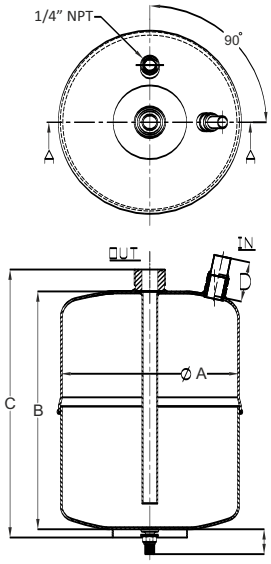

DRAWING-1

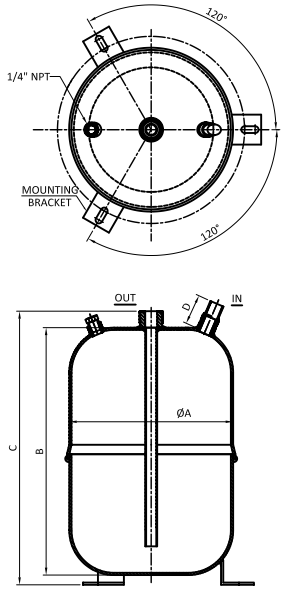

DRAWING-2

LIQUID REFRIGERANT RECEIVER DEEP DRAW TYPE																	
SR. NO.	MODEL NO.	INTERNAL VOLUME (CAPACITY) LITERS	PUMP DOWN CAPACITY (KG)	CONNECTION SIZES		DIMENSIONS								MOUNTING OPTIONS	REFER DRG. NO.	NPT CONN.	LIQUID INDICATOR
						ØA		B		C		D					
				INLET	OUTLET\ROTOLOCK VALVE	mm	inch	mm	inch	mm	inch	mm	inch				
1	LRRVD-36-180-3S	1	0.92	3/8" ODF	1"-14 UNS \ 3/8" ODF	91	3.58	180	7.09	210	8.27	53	2.09	M10X1.5 BOLT & NUT	1	NA	
2	LRRVD-47-210-3S	2	1.84	3/8" ODF	1"-14 UNS \ 3/8" ODF	120	4.72	210	8.27	240	9.45	53	2.09				
3	LRRVD-59-270-4S	4	3.69	1/2" ODF	1"-14 UNS \ 1/2" ODF	150	5.91	270	10.63	300	11.81	55	2.17				
4	LRRVD-70-240-5S	6	5.53	5/8" ODF	1-1/4"-12 UNF \ 5/8" ODF	180	7.09	240	9.45	270	10.63	40	1.57			1/4" SAE	
5	LRRVD-70-300-5S	8	7.37	5/8" ODF	1-1/4"-12 UNF \ 5/8" ODF	180	7.09	300	11.81	332	13.07	40	1.57				
6	LRRVD-86-309-5S	10	10.35	5/8" ODF	1-1/4"-12 UNF \ 5/8" ODF	219	8.62	300	11.81	348	13.70	40	1.57	Three leg mounting	2		
7	LRRVD-86-349-6S	12	12.42	3/4" ODF	1-1/4"-12 UNF \ 3/4" ODF	219	8.62	350	13.78	400	15.75	42	1.65				

Connection Type (Solder)
Connection Size (3/8")
Length in mm
Diameter in inch (4.7")

LRRVD-47-210-3S

Liquid Refrigerant Receiver Vertical Deep Draw Type